OCR
Oxford Cambridge and RSA

Monday 16 June 2025 – Morning

GCSE (9–1) Physics B (Twenty First Century Science)

J259/04 Depth in physics (Higher Tier)

Time allowed: 1 hour 45 minutes

You must have:
- a ruler (cm/mm)
- the Equation Sheet for GCSE (9–1) Physics B (inside this document)

You can use:
- a scientific or graphical calculator
- an HB pencil

H

Please write clearly in black ink. **Do not write in the barcodes.**

Centre number | | | | | | Candidate number | | | | |

First name(s) _____

Last name _____

INSTRUCTIONS
- Use black ink. You can use an HB pencil, but only for graphs and diagrams.
- Write your answer to each question in the space provided. If you need extra space use the lined pages at the end of this booklet. The question numbers must be clearly shown.
- Answer **all** the questions.
- Where appropriate, your answer should be supported with working. Marks might be given for using a correct method, even if your answer is wrong.

INFORMATION
- The total mark for this paper is **90**.
- The marks for each question are shown in brackets **[ ]**.
- Quality of extended response will be assessed in questions marked with an asterisk (*).
- This document has **24** pages.

ADVICE
- Read each question carefully before you start your answer.

© OCR 2025 [601/8685/9]
DC (WW/CT) 357090/5
OCR is an exempt Charity

1 According to Newton's third law, when two objects interact, they apply forces on each other.

(a) A person pushes on a wall with a force of 100 N.

The diagram shows two forces that form an interaction pair between the person and the wall.

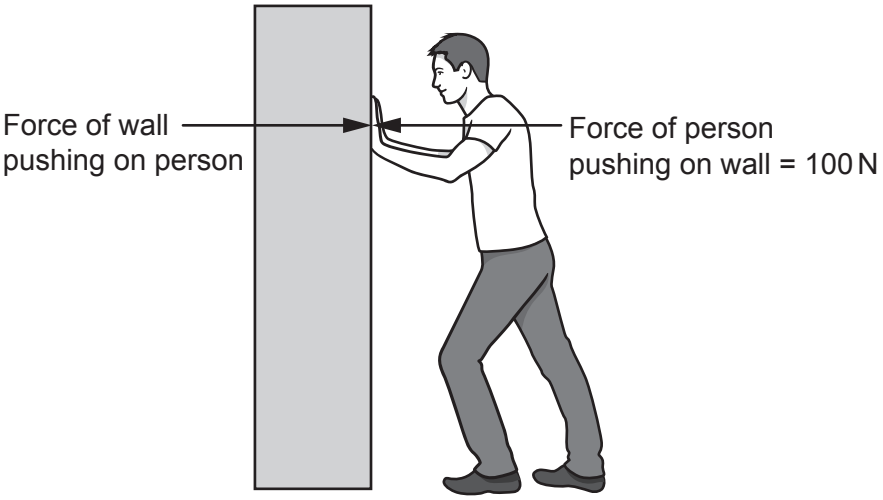

Which statements about this pair of forces are **true** and which are **false**?

Tick (✓) **one** box in each row.

	True	False
Both forces are acting on the person.		
The forces are the same kind of force.		
The forces are opposite in direction.		
The force of the wall on the person equals 100 N.		

[3]

(b) Which of these forces is a **contact** force?

Tick (✓) **one** box.

Electrostatic ☐

Friction ☐

Gravitational ☐

Magnetic ☐

[1]

© OCR 2025

(c) Complete the sentences in the table to describe each interaction pair of forces.

Use words from the list.

attracting	**Earth**	**Moon**	**negatively**
positively	**repelling**	**Sun**	

A magnet attracting an iron bar.	The iron bar ..... the magnet.
A positively charged rod attracting a piece of paper.	The piece of paper attracting the ..... charged rod.
The gravitational force of the Earth on the Moon.	The gravitational force of the ..... on the ..... .

[4]

© OCR 2025

2 Scientists advise people to use sunscreen when they are outside on a sunny day.

Sunscreen absorbs the UV radiation from the Sun.

(a)* Explain:
- how exposure to UV radiation can cause damage to human tissue
- why it is important to use sunscreen when outside on a sunny day.

.....

.....

.....

.....

.....

.....

.....

.....

.....

.....

.....

.....

..... **[6]**

© OCR 2025

(b) The sun protection factor (SPF) is a measure of the strength of sunscreen.

A student investigates the SPF of different suncreens.

They use beads that change colour when they are exposed to UV radiation.

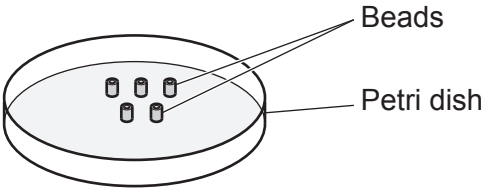

They use this method:

- Dip five beads in sunscreen with a SPF of 10.
- Spread the beads out in a petri dish and place them outside in the sun.
- Record the time taken for all the beads to change colour.
- Repeat the steps using different sunscreens with SPFs of 20, 30 and 40.

(i) Describe **two** improvements the student can make to their method.

1 .....

.....

2 .....

.....

[2]

(ii) The table shows the student's results.

SPF	Time taken for all beads to change colour
10	3.25
20	6
30	10
40	14

The table of results contains mistakes.

State **two** mistakes made by the student.

1 .....

.....

2 .....

.....

[2]

© OCR 2025

3 Uranium-235 is a radioactive isotope.

(a) Uranium-235 can be written as:

$^{235}_{92}U$

How many protons and neutrons are contained in the nucleus of uranium-235?

Number of protons = ...

Number of neutrons = ...

[2]

(b) Uranium-235 undergoes alpha decay.

Which of these is the correct equation for this decay?

Tick (✓) **one** box.

$^{235}_{92}U \rightarrow {}^{231}_{92}U + {}^{4}_{0}He$ ☐

$^{235}_{92}U \rightarrow {}^{231}_{92}U + {}^{4}_{1}He$ ☐

$^{235}_{92}U \rightarrow {}^{231}_{90}Th + {}^{4}_{2}He$ ☐

[1]

© OCR 2025

(c) The graph shows how the activity of a sample of uranium-235 changes with time.
The activity is measured in counts per minute (cpm).

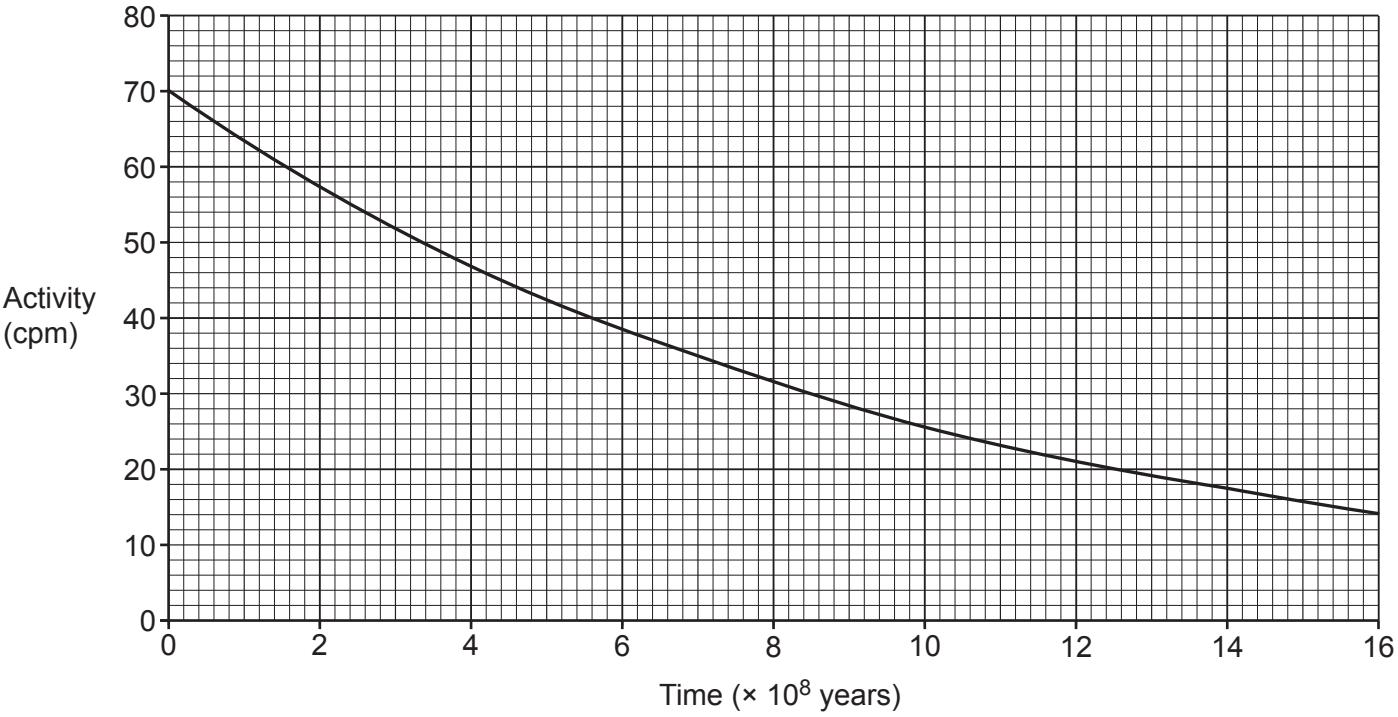

(i) What is meant by the half-life of a radioactive isotope?

Tick (✓) **one** box.

Half of the decrease in activity per second. ☐

The number of atoms formed in half a year. ☐

The time taken for the activity to fall by half. ☐

The time taken for the activity to reach 0.5 cpm. ☐

[1]

(ii) Find the activity of the sample at 14×10^8 years.

Use the graph.

Activity at 14×10^8 years = ... cpm **[1]**

(iii) The half-life of uranium-235 is 7×10^8 years.

Calculate the activity at 21×10^8 years.

Activity at 21×10^8 years = ... cpm **[2]**

© OCR 2025

(d) Complete the sentences about the use of uranium-235 in a nuclear fission reactor.

Use words from the list.

chain	**chemical**	**electrons**	**gamma**
kinetic	**neutrons**	**protons**	**ultraviolet**

A neutron is absorbed by a nucleus of uranium.

The nucleus splits into two smaller parts.

This releases more ....., which may go on to make further reactions. This is known as a ..... reaction.

The energy released from the nucleus is transferred as ..... energy of the particles.

Energy is also emitted as ..... radiation.

[4]

© OCR 2025

4 A student investigates how the number of layers of insulation affects how quickly a beaker of hot water will cool.

They use this method:

- Wrap three beakers in a different number of layers of bubble wrap insulation.
- Leave one beaker without any bubble wrap.
- Pour hot water into each beaker.
- Put a lid on all the beakers.
- Take the initial temperature of the water in each beaker using a thermometer.
- Continue to take the temperature every 5 minutes for 25 minutes.

(a)
(i) State **two** variables that need to be controlled in this experiment.

1 .....

.....

2 .....

.....
[2]

(ii) Explain why putting a lid on the beakers will make the water stay warmer for longer.

.....

..... **[1]**

© OCR 2025

(b) The graph shows the student's results.

Key:

3 layers of bubble wrap

2 layers of bubble wrap

1 layer of bubble wrap

No bubble wrap

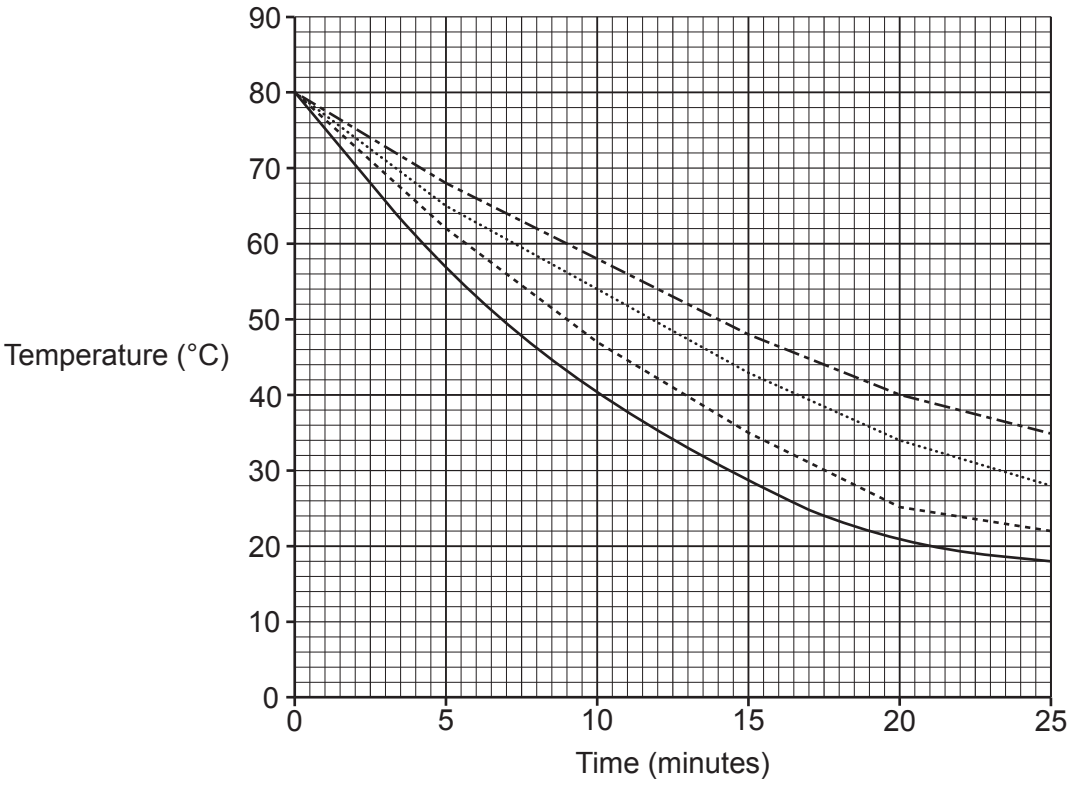

(i) Describe how the number of layers of bubble wrap affects the change in temperature over the 25 minutes.

.....

..... **[1]**

© OCR 2025

(ii) How does the **rate of change** in temperature of the water in each beaker change over the 25 minutes?

Use the graph.

Tick (✓) **one** box.

Decreases ☐

Increases ☐

Stays the same ☐

[1]

(iii) Explain how the graph shows this.

.....

..... **[1]**

(iv) The student repeats the experiment with a different material for the insulation.

This new material has the same thickness but a greater thermal conductivity in comparison to the bubble wrap.

Predict the temperature of the water after 10 minutes when the beaker is wrapped in **one** layer of the new material.

Use the graph.

Temperature of water after 10 minutes = ... °C **[1]**

© OCR 2025

5 Levers and gears are used to transmit rotational forces.

(a) **Fig. 5.1** shows a simple lever with a force of 8 N applied 15 cm from the pivot.

Fig. 5.1

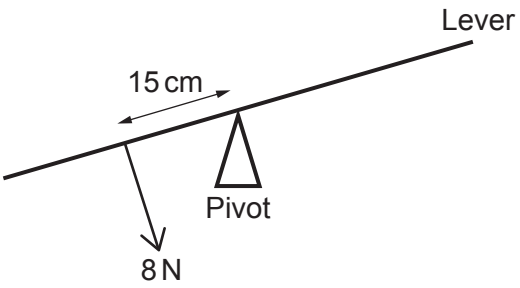

(i) Calculate the moment of the 8 N force about the pivot.

Use the Equation Sheet.

Give your answer in **Nm**.

Moment = ... Nm **[3]**

(ii) A second force of 4 N is applied to the lever and the lever becomes balanced.

Fig. 5.2 shows the balanced lever.

Fig. 5.2

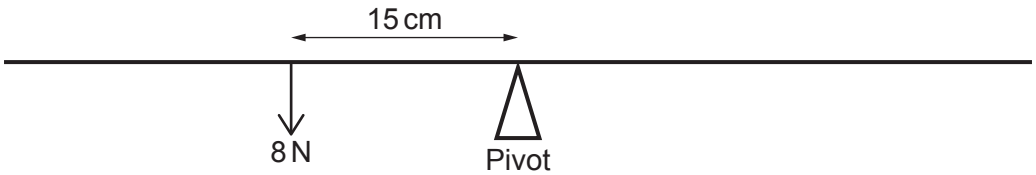

The 4 N force is missing from **Fig. 5.2**.

Describe the direction and position that this 4 N force is applied to the lever to keep it balanced.

You can draw the 4 N force on **Fig. 5.2** or describe it in the answer space below.

.....

.....

.....

..... **[2]**

© OCR 2025

(b) **Fig. 5.3** shows a simple two-gear system.

Fig. 5.3

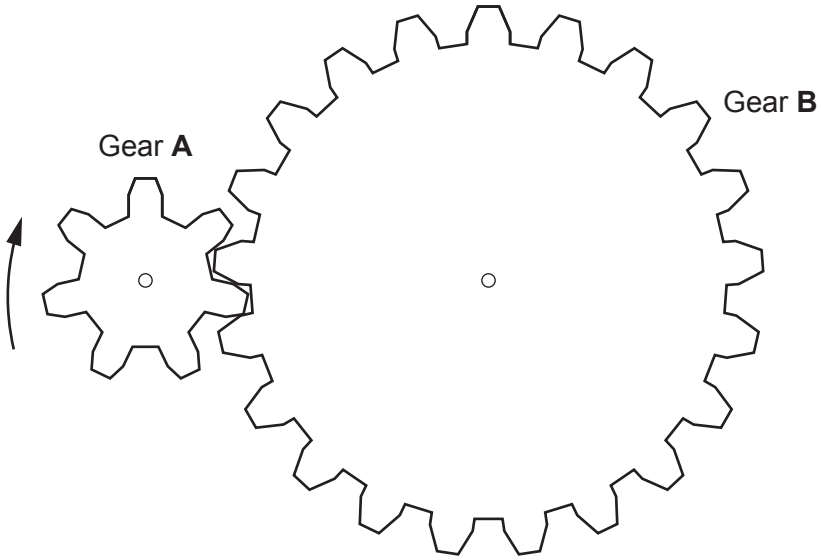

(i) The arrow on **Fig. 5.3** shows that gear **A** is rotating in a clockwise direction.

Draw an arrow on **Fig. 5.3** to show the direction that gear **B** rotates. **[1]**

(ii) Gear **A** has 7 teeth.

Gear **B** has 21 teeth.

Both gears have the same size teeth.

Gear **A** completes 3 full rotations.

Calculate the number of full rotations completed by gear **B**.

Number of full rotations = ... **[2]**

© OCR 2025

6 A student investigates series and parallel circuits with two resistors, R1 and R2.

(a) **Fig. 6.1** shows the series circuit they build.

Fig. 6.1

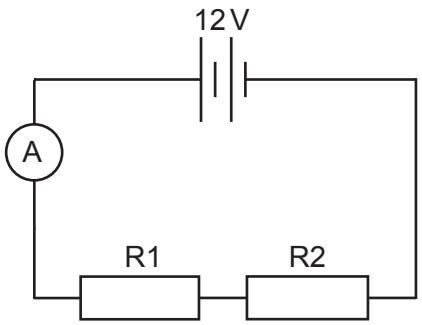

(i) Describe the change in the energy stores, when there is a current in the circuit.

.....

.....

.....

..... **[2]**

(ii) Show that the reading on the ammeter in the circuit in **Fig. 6.1** is less than 0.25 A.

- The potential difference across the battery is 12 V.
- The resistance of R1 is 30 Ω.
- The resistance of R2 is 30 Ω.

Use the Equation Sheet.

Reading on ammeter = ... A **[4]**

© OCR 2025

(iii) Calculate the work done by the 12 V battery in 20 seconds.

Use the Equation Sheet.

Work done = ... J **[4]**

(iv) Calculate the power delivered by the 12 V battery.

Use the Equation Sheet.

State the units.

Power = ... Unit ..... **[3]**

© OCR 2025

(b) The student reconnects the same components from **Fig. 6.1** so that the resistors are now in parallel.

Fig. 6.2 shows this parallel circuit.

Fig. 6.2

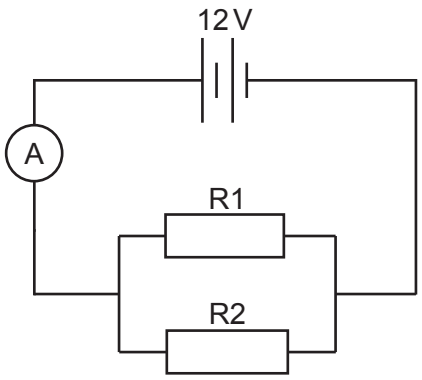

The resistance of R1 = 30 Ω.
The resistance of R2 = 30 Ω.

(i) Calculate the current in R1 in the circuit in **Fig. 6.2**.

Current = ... A **[2]**

(ii) Explain why the reading on the ammeter in the parallel circuit in **Fig. 6.2** is greater than the reading on the ammeter in the series circuit in **Fig. 6.1**.

.....

.....

.....

..... **[2]**

© OCR 2025

7* The Sun was formed from a cloud of dust and gas.

The dust and gas particles were pulled together by the force of gravity.
The cloud collapsed and fusion reactions started.
The Sun then became a stable star.

The table shows typical temperatures of a cloud of dust and gas and of a stable star.

	Temperature (°C)
Cloud of dust and gas	1.0×10^{1}
Stable star	1.5×10^{7}

Explain how the work done by the force of gravity on a cloud of dust and gas, forms a stable star.

Use the particle model of matter and the data in the table.

.....

.....

.....

.....

.....

.....

.....

.....

.....

.....

.....

..... **[6]**

© OCR 2025

8 A teacher demonstrates the acceleration of a trolley along a smooth surface.

The diagram shows the equipment the teacher uses.

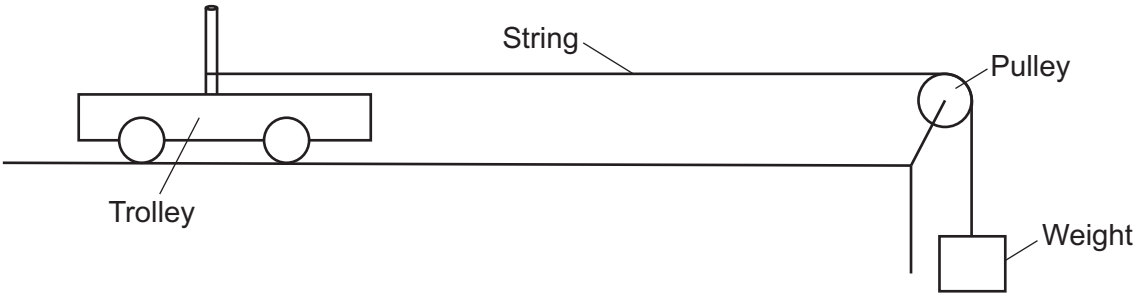

The trolley is connected to a weight of 5 N using a string.

When the weight falls the trolley accelerates towards the pulley.

(a) The trolley has a mass of 1.2 kg.

(i) Calculate the kinetic energy store of the trolley when it has a velocity of 0.5 m / s.

Use the Equation Sheet.

Kinetic energy store = ... J **[3]**

(ii) Calculate the change in momentum when the trolley accelerates from 0.5 m / s to 1.2 m / s.

Use the Equation Sheet.

Change in momentum = ... kg m / s **[3]**

© OCR 2025

(iii) The accelerating force on the trolley is 5 N.

Calculate the time taken for the trolley to increase its velocity from 0.5 m / s to 1.2 m / s.

Use:
- the Equation Sheet
- your answer to **(a)(ii)**.

Give your answer to **2** decimal places.

Time taken = ... s **[4]**

(b) In reality, frictional forces act on the trolley.

The actual time taken for the trolley to accelerate from 0.5 m / s to 1.2 m / s is different to the answer calculated in **(a)(iii)**.

Explain how frictional forces affect the time taken.

.....

.....

.....

.....

.....

..... **[3]**

(c) The teacher repeats the same experiment with a new trolley which has a greater inertial mass than the original trolley.

Explain why the statement below is **true**:

The new trolley will have a smaller acceleration than the original trolley.

.....

.....

.....

..... **[2]**

© OCR 2025

9 Radio waves and microwaves are electromagnetic waves used for telecommunication.

(a)
(i) State **two** differences between microwaves and radio waves.

1 .....

2 .....
[2]

(ii) State **two** similarities between microwaves and radio waves.

1 .....

2 .....
[2]

(b) Radio waves are produced in a radio transmitter.

Describe how radio waves are produced from an electrical current.

.....

..... **[1]**

© OCR 2025

(c) A radio transmitter on the surface of the Earth emits a radio wave to the ionosphere.

The radio wave reflects from the ionosphere and is detected by a radio receiver on the surface of the Earth.

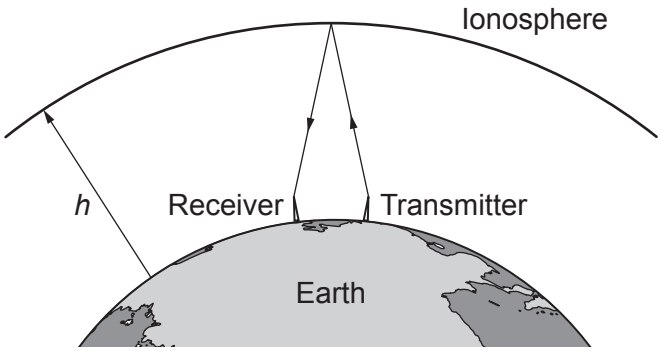

Estimate the time for the radio wave to travel from the transmitter to the receiver.

The speed of radio waves is 3×10^8 m/s.

The height of the ionosphere *h* above the surface of the Earth is 6×10^4 m.

Assume the distance between the transmitter and receiver is very small compared to the height of the ionosphere.

The height of the transmitter and receiver are negligible.

Use the Equation Sheet.

Give your answer in **standard form**, in **seconds**.

Time = ... s **[3]**

END OF QUESTION PAPER

© OCR 2025

EXTRA ANSWER SPACE

If you need extra space use these lined pages. You must write the question numbers clearly in the margin.

© OCR 2025

© OCR 2025

OCR
Oxford Cambridge and RSA

Copyright Information

OCR is committed to seeking permission to reproduce all third-party content that it uses in its assessment materials. OCR has attempted to identify and contact all copyright holders whose work is used in this paper. To avoid the issue of disclosure of answer-related information to candidates, all copyright acknowledgements are reproduced in the OCR Copyright Acknowledgements Booklet. This is produced for each series of examinations and is freely available to download from our public website (www.ocr.org.uk) after the live examination series.

If OCR has unwittingly failed to correctly acknowledge or clear any third-party content in this assessment material, OCR will be happy to correct its mistake at the earliest possible opportunity.

For queries or further information please contact The OCR Copyright Team, The Triangle Building, Shaftesbury Road, Cambridge CB2 8EA.

OCR is part of Cambridge University Press & Assessment, which is itself a department of the University of Cambridge.

© OCR 2025